This drawing and design is protected by copyright and the information is confidential. It is also protected and registred under Dutch laws through the Dutch government department for Taxes. The drawing and/or models may not be copied, reproduced, duplicated or disclosed to others, in whole or in part without prior written concent of SEA PARTS V.O.F. / the Netherlands.

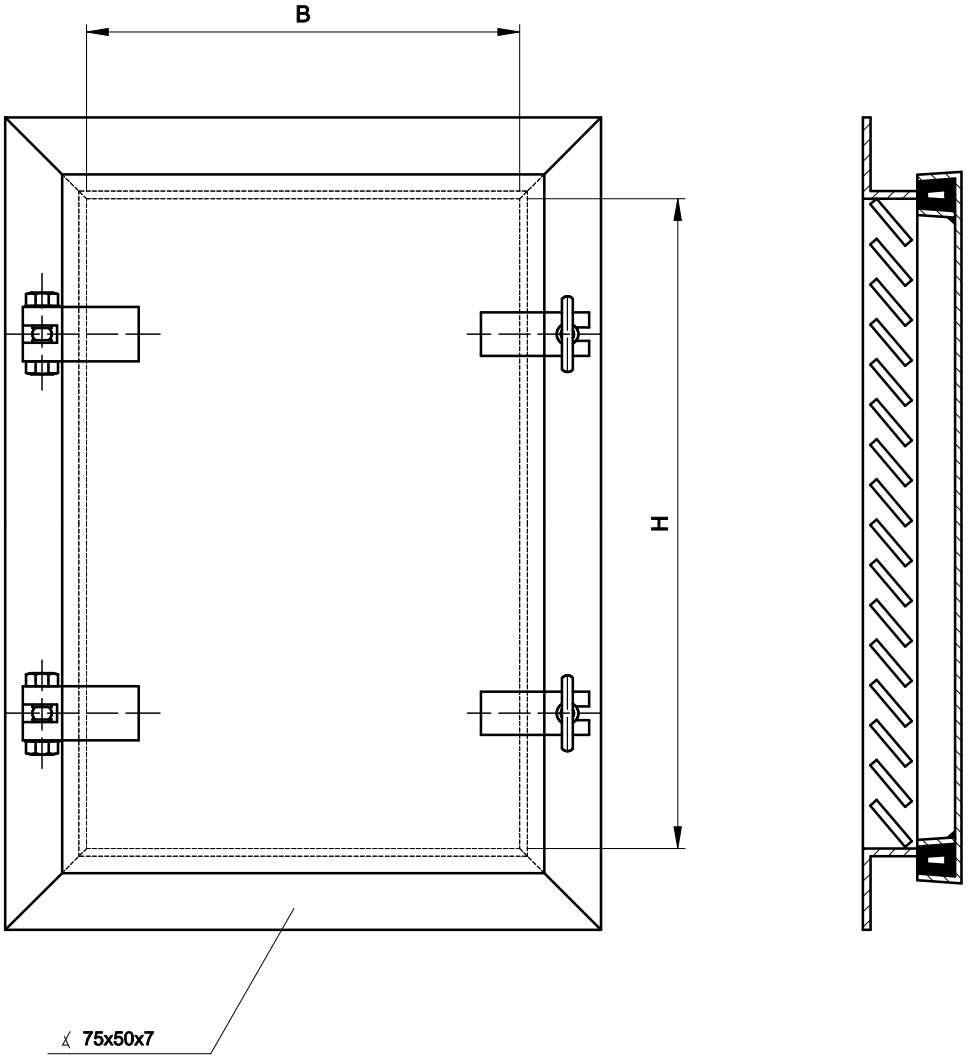

Name	Material :		Tolerance : ISO 2768m
	Drawn: P.H. Date : 18-10-2001	Checked : JDR	Date :
DATE	SEAPARTS	Description : LOUVRE + COVER ANGLE BAR, HINGES AND TOGGLES	A4
REV	SEA PARTS V.O.F. Molenraai 11 T : +31 (0) 598 361 665 W : www.seaparts.nl 9611TH Sappemeer The Netherlands F : +31 (0) 848 375 685 e: info@seaparts.nl	Drawing no : LOH-N-100	Size in mm Page : 1 / 1

This drawing and design is protected by copyright and the information is confidential. It is also protected and registred under Dutch laws through the Dutch government department for Taxes. The drawing and/or models may not be copied, reproduced, duplicated or disclosed to others, in whole or in part without prior written concent of SEA PARTS V.O.F. / the Netherlands.

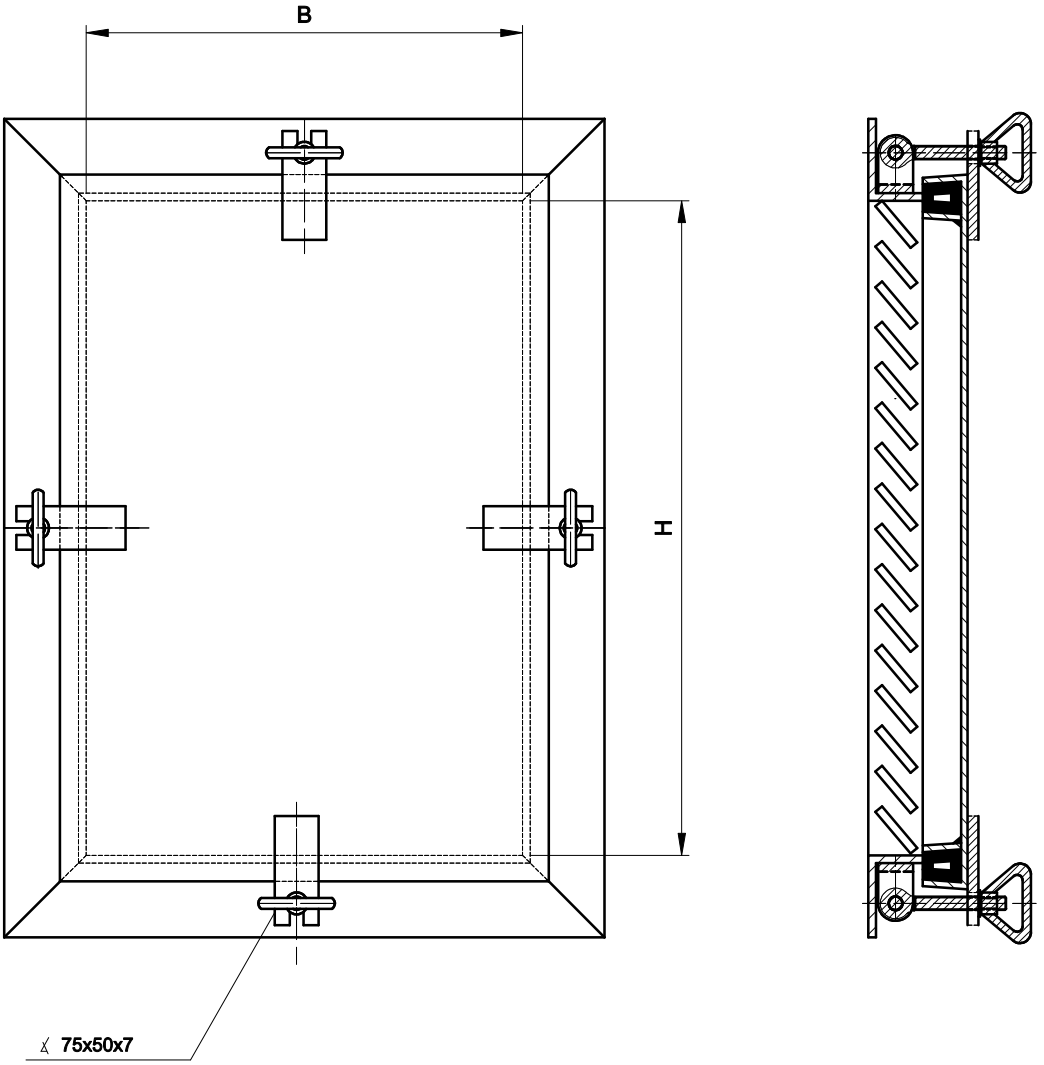

Name	Material :		Tolerance : ISO 2768m
	Drawn: P.H. Date : 18-10-2001	Checked : JDR	Date :
REV DATE	SEAPARTS SEA PARTS V.O.F. 9611TH Sappemeer Molenraai 11 The Netherlands T : +31 (0) 598 361 665 F : +31 (0) 848 375 685 W : www.seaparts.nl e: info@seaparts.nl	Description : LOUVRE + COVER ANGLE BAR, TOGGLES NO HINGES	A4
		Drawing no : LOH-N-200	Size in mm Page : 1 / 1

This drawing and design is protected by copyright and the information is confidential. It is also protected and registred under Dutch laws through the Dutch government department for Taxes. The drawing and/or models may not be copied, reproduced, duplicated or disclosed to others, in whole or in part without prior written concent of SEA PARTS V.O.F. / the Netherlands.

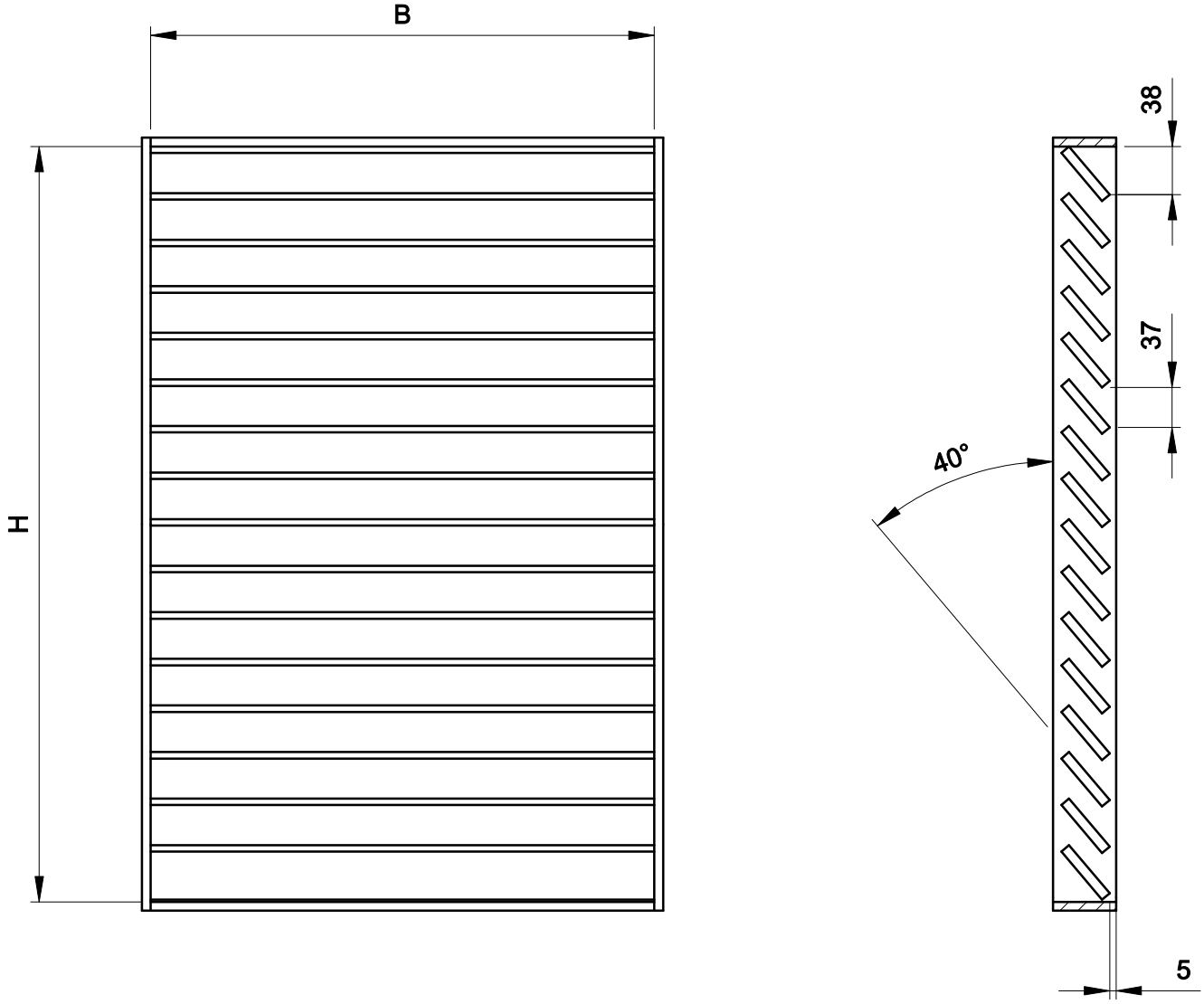

Name	Material :		Tolerance : ISO 2768m
	Drawn: P.H. Date : 23-10-2001	Checked : JDR	Date :
REV DATE	SEAPARTS	Description : FRAME LOUVRE	A4
	SEA PARTS V.O.F. Molenraai 11 T : +31 (0) 598 361 665 W : www.seaparts.nl	9611TH Sappemeer The Netherlands F : +31 (0) 848 375 685 e: info@seaparts.nl	Size in mm
		Drawing no : LOP-N-030	Page : 1 / 1

This drawing and design is protected by copyright and the information is confidential. It is also protected and registred under Dutch laws through the Dutch government department for Taxes. The drawing and/or models may not be copied, reproduced, duplicated or disclosed to others, in whole or in part without prior written concent of SEA PARTS V.O.F. / the Netherlands.

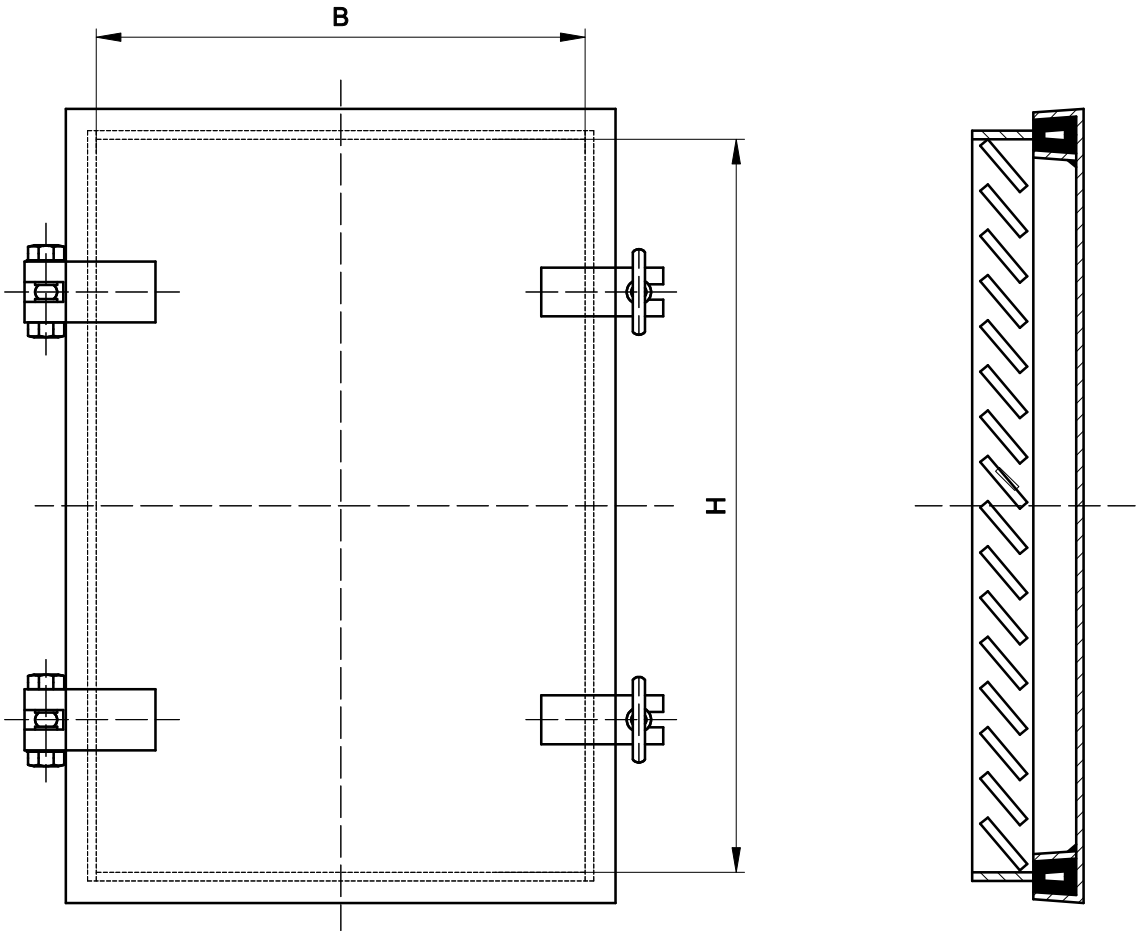

Name	Material :		Tolerance : ISO 2768m		
	Drawn: P.H.	Date : 18-10-2001	Checked : JDR	Date :	
REV DATE	SEAPARTS SEA PARTS V.O.F. Molenraai 11 T : +31 (0) 598 361 665 W : www.seaparts.nl 9611TH Sappemeer The Netherlands F : +31 (0) 848 375 685 e: info@seaparts.nl		Description : LOUVRE + COVER STRIP, HINGES AND TOGGLES		A4
			Drawing no : LOP-N-100		Size in mm Page : 1 / 1

This drawing and design is protected by copyright and the information is confidential. It is also protected and registred under Dutch laws through the Dutch government department for Taxes. The drawing and/or models may not be copied, reproduced, duplicated or disclosed to others, in whole or in part without prior written concent of SEA PARTS V.O.F. / the Netherlands.

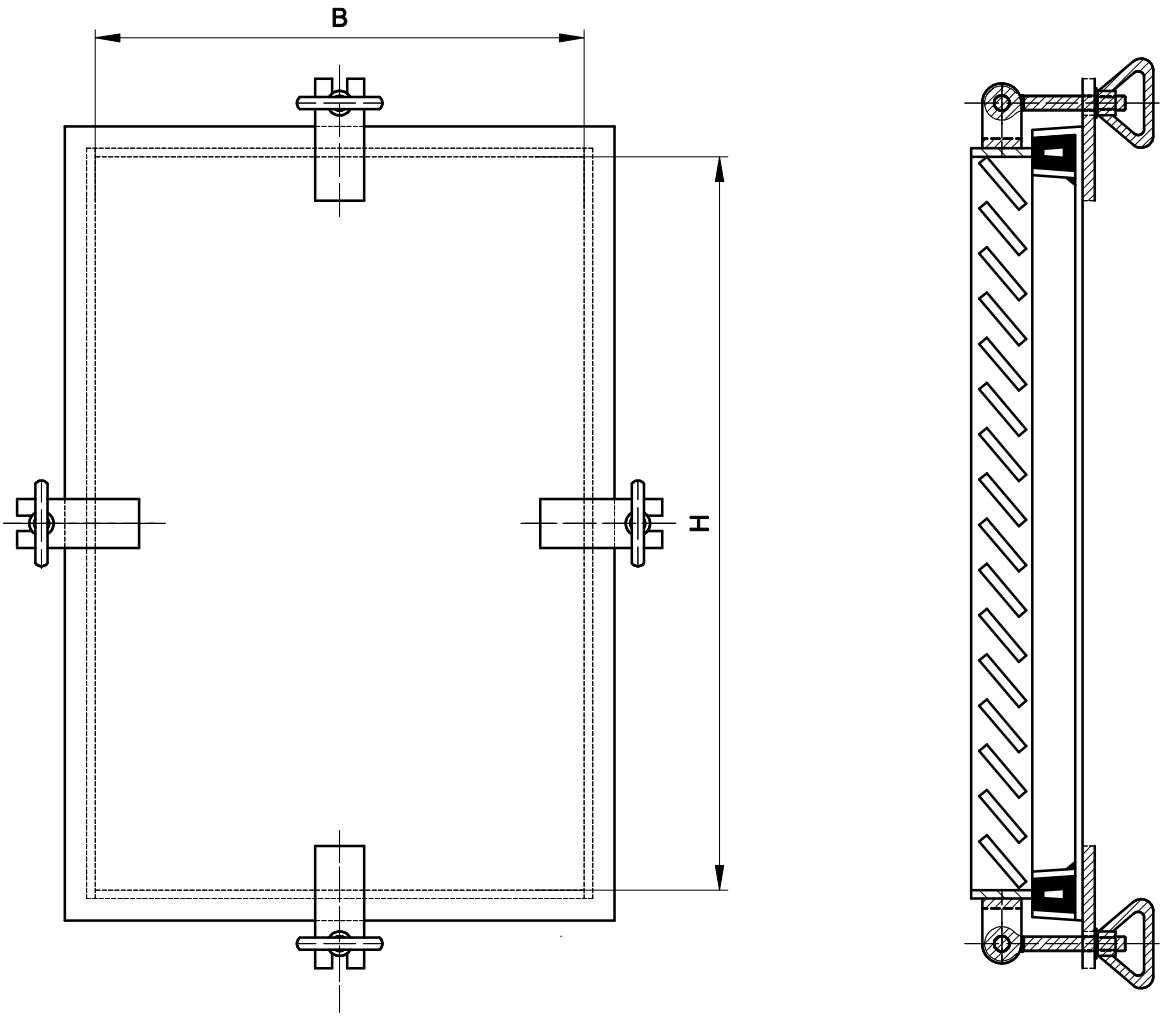

Name	Material :		Tolerance : ISO 2768m
	Drawn: P.H. Date : 18-10-2001	Checked : JDR	Date :
REV DATE	SEAPARTS	Description : LOUVRE + COVER STRIP, TOGGLES NO HINGES	A4
	SEA PARTS V.O.F. Molenraai 11 T : +31 (0) 598 361 665 W : www.seaparts.nl	9611TH Sappemeer The Netherlands F : +31 (0) 848 375 685 e: info@seaparts.nl	Drawing no : LOP-N-200
			Size in mm
			Page : 1 / 1